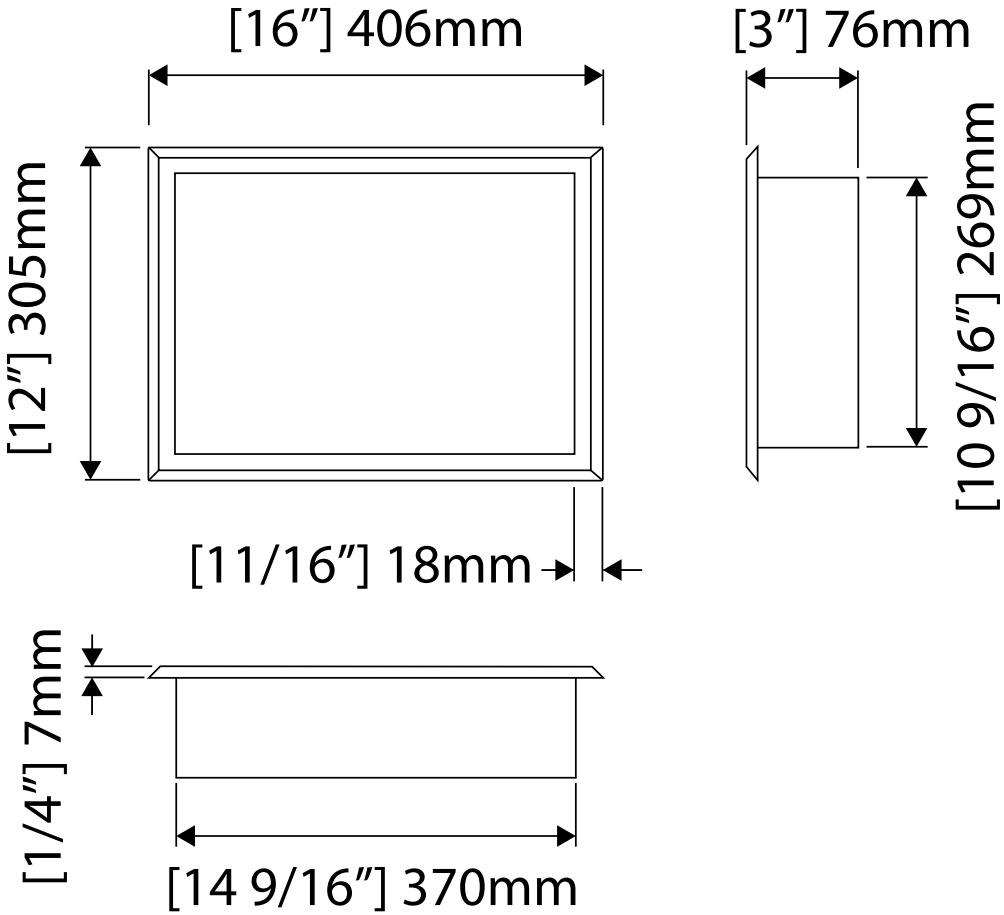
[16″] 406mm
[3″] 76mm
[12″] 305mm
[10 9/16″] 269mm
[11/16″] 18mm
[1/4″] 7mm
[14 9/16″] 370mm