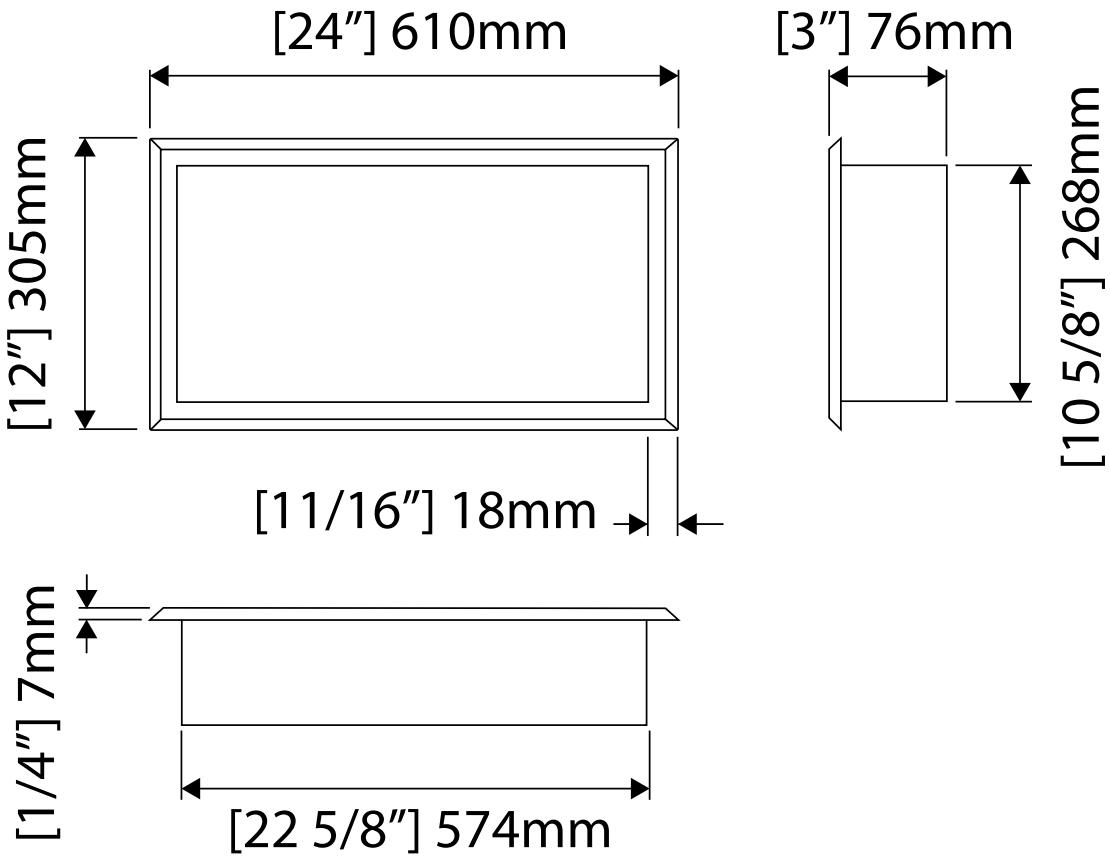
[24″] 610mm
[3″] 76mm
[12″] 305mm
[10 5/8″] 268mm
[11/16″] 18mm
[1/4″] 7mm
[22 5/8″] 574mm